ITEM NO.	PART NUMBER	DESCRIPTION	QTY.
10	MACH-004212	Body w Fill Port, CTS, HI34	1
20	MACH-004268	Cap, CTS, HI33-35	1
30	MACH-005527	Clevis, CTS, HI33-35	1
40	MACH-005604	Lever, CTS, HI33-35	1
50	HDW-005573	Knob, Connect, McMaster, 6046K4	1
60	MACH-004676	Stem w Fill Port, CTS, HI34	1
70	HDW-034019	Washer, Connect, Flat Reid, FW-5	1
80	HDW-005412	Spring, Connect, LC-063L-2-S	1
90	HDWX-035090	Screw, Socket Set, .25-20 x .3125in	1
100	HDWX-035093	Dowel Pin, Connect, .25 x 1.125in	1
110	SEAX-008541	ORING, 115, Buna-N	2
120	MACH-005571	Handle, CTS, HI30-35	1
130	HDW-005566	Handle Grip, Connect, SA-1073	1
140	MACH-004973	Spacer, CTS, CI34	1
150	MACH-004454	Washer, CTS, CI34-AC	1
160	SEAL-005338	Seal, CTS, HI34-AC	1
170	MACH-004331	Nose, CTS, CI34-AC	1

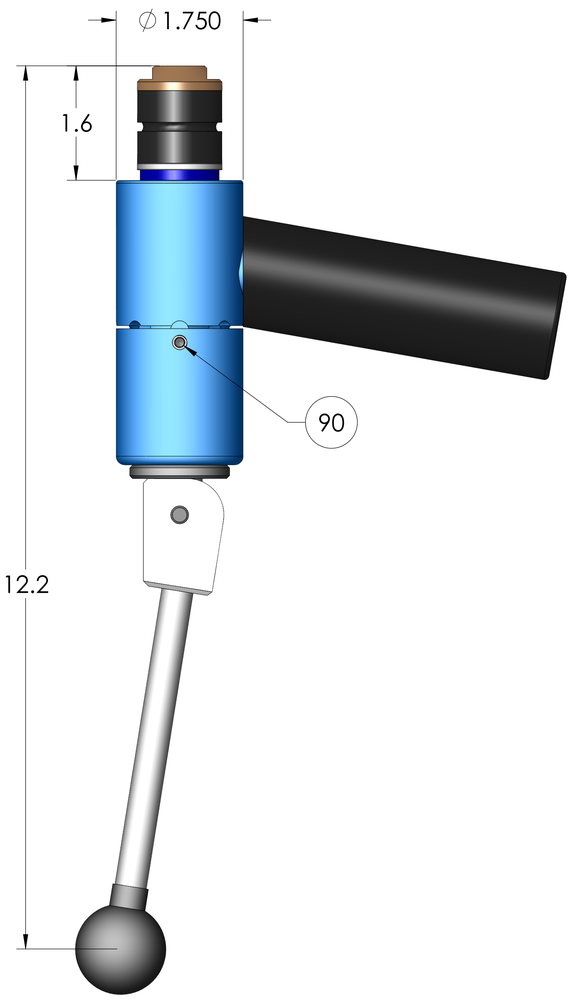

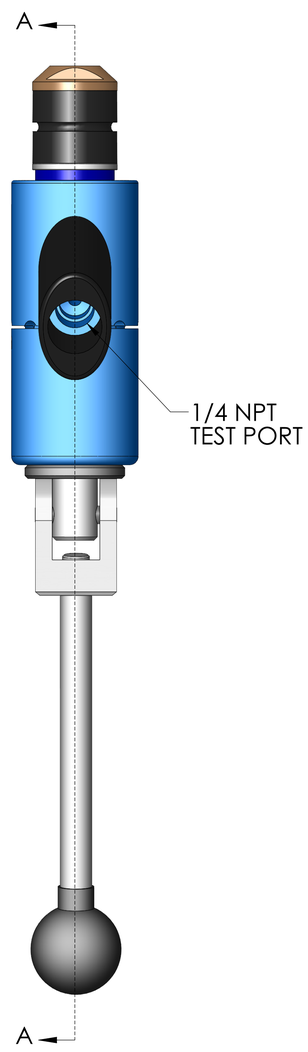

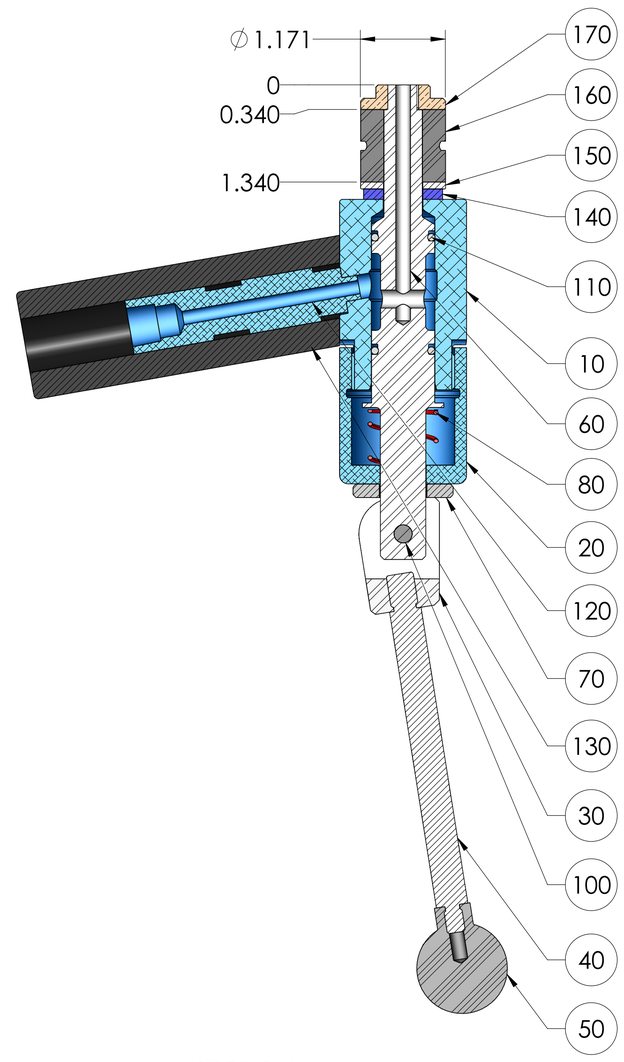

SECTION A-A

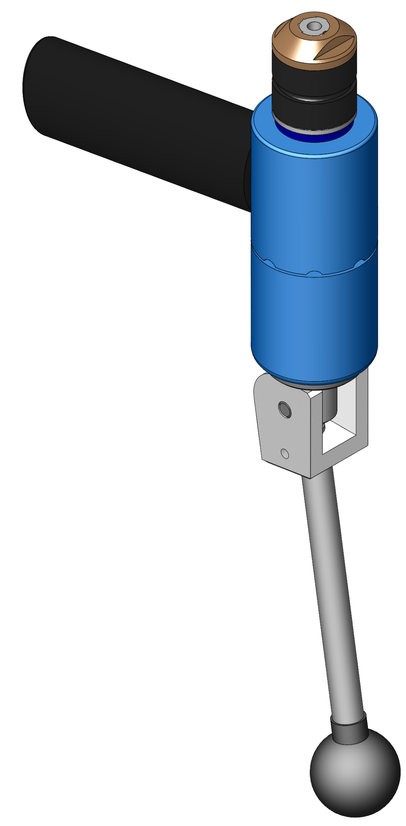

CINCINNATI TEST SYSTEMS
10100 PROGRESS WAY HARRISON, OH 45030

SIZE D	DESCRIPTION Connect Assembly, CTS, HIH34-AC		
PART NUMBER CTSC-003547			REV A
DATE 10/19/18	DRAWN BY	CHECKED BY JAW	SHEET 1 OF 1

FILE LOCATION: C:\Solidworks PDM\PDM\R&D Product Development\CTS Connects\HI\Connect Assembly\HIH\HIH34\CTSC-003547\

Tuesday, July 1, 2025